OFFICE SPACE FOR LEASE

# SHADY OAKS PLAZA

6050 Babcock St, Palm Bay, FL 32909

- High Traffic Location
- 3 Entrances for Easy Access
- Southwest Corner of Malabar & Babcock
- Near I-95
- 38,500 Daily Traffic Counts
- Competitive Below Market Rates
- Suite 16A &19 - 5,082 SF
- Office Area, Large Open Room, Multiple Work Rooms and Offices, Multi Stall Restrooms
- Could be Great for Large Tech Office and Many Other Uses!
- $10/SF/YR plus $5.08/SF/YR NNN

*Discounted Rate Offered Due to Renovations Needed

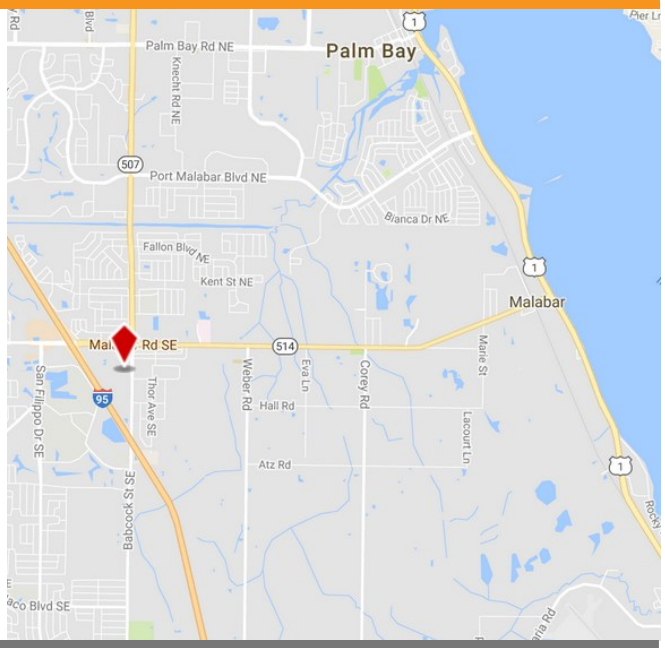


JMREALESTATE.COM

JM REAL ESTATE

COMMERCIAL
MANAGEMENT
LEASING
SALES

**Courtney Smith**
JM Real Estate, Inc.
321.242.2882
Cell: 321-423-4305
Courtney@JMRealEstate.com

*Information contained herein has been obtained from others and is considered to be reliable; however, a prospective purchaser, agent, or lessee is expected to verify all information to their satisfaction. We make no guarantee, warranty, or representations herein. Licensed Real Estate Broker.*

OFFICE SPACE FOR LEASE

# SHADY OAKS PLAZA

6050 Babcock St, Palm Bay, FL  32909

JMRealEstate.com

JM Real Estate

Commercial
Management
Leasing
Sales

**Courtney Smith**
JM Real Estate, Inc.
321.242.2882
Cell:  321-423-4305
Courtney@JMRealEstate.com

*Information contained herein has been obtained from others and is considered to be reliable; however, a prospective purchaser, agent, or lessee is expected to verify all information to their satisfaction.  We make no guarantee, warranty, or representations herein.  Licensed Real Estate Broker.*

OFFICE SPACE FOR LEASE

# SHADY OAKS PLAZA

6050 Babcock St, Palm Bay, FL 32909

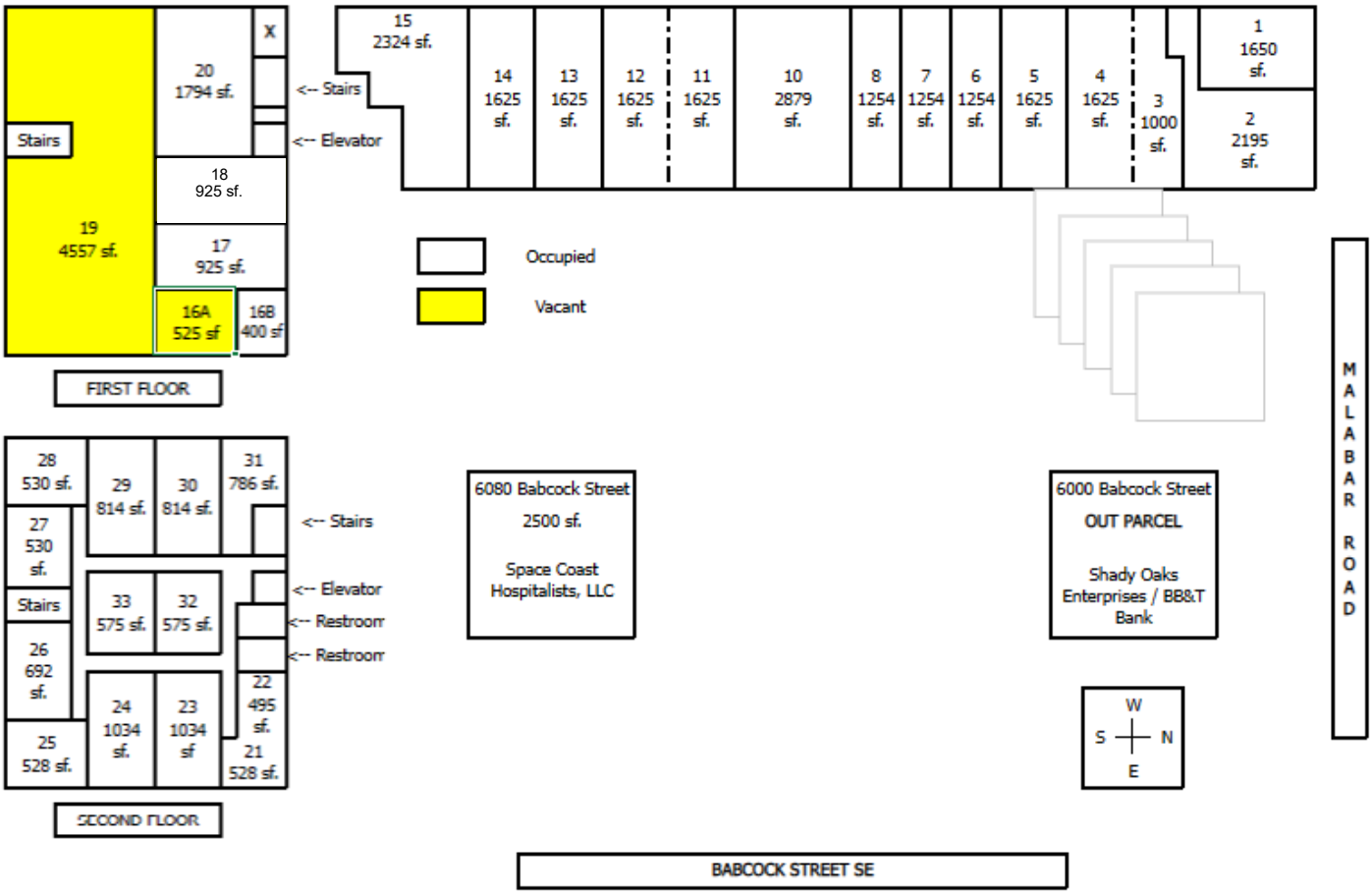

JMREALESTATE.COM

JM REAL ESTATE

COMMERCIAL
MANAGEMENT
LEASING
SALES


**Courtney Smith**
JM Real Estate, Inc.
321.242.2882
Cell: 321-423-4305
Courtney@JMRealEstate.com



*Information contained herein has been obtained from others and is considered to be reliable; however, a prospective purchaser, agent, or lessee is expected to verify all information to their satisfaction. We make no guarantee, warranty, or representations herein. Licensed Real Estate Broker.*